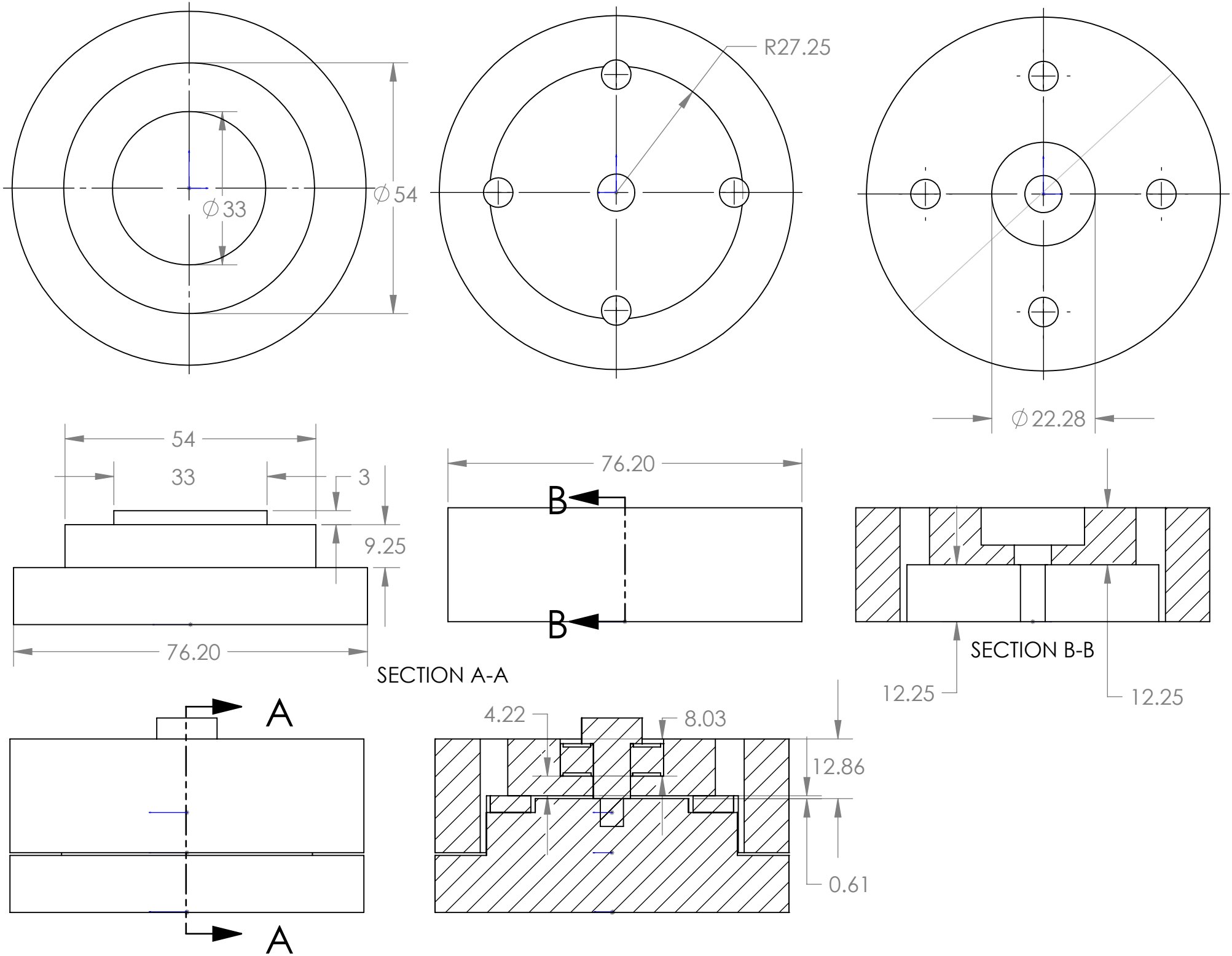
∅33
∅54
R27.25
∅22.28
54
33
3
9.25
76.20
SECTION A-A
76.20
B
B
SECTION B-B
12.25
12.25
A
A
4.22
8.03
12.86
0.61